Bottom_Side_SAT

```
* dsauersanjose@aol.com  8/15/08
* www.idea2ic.com
```

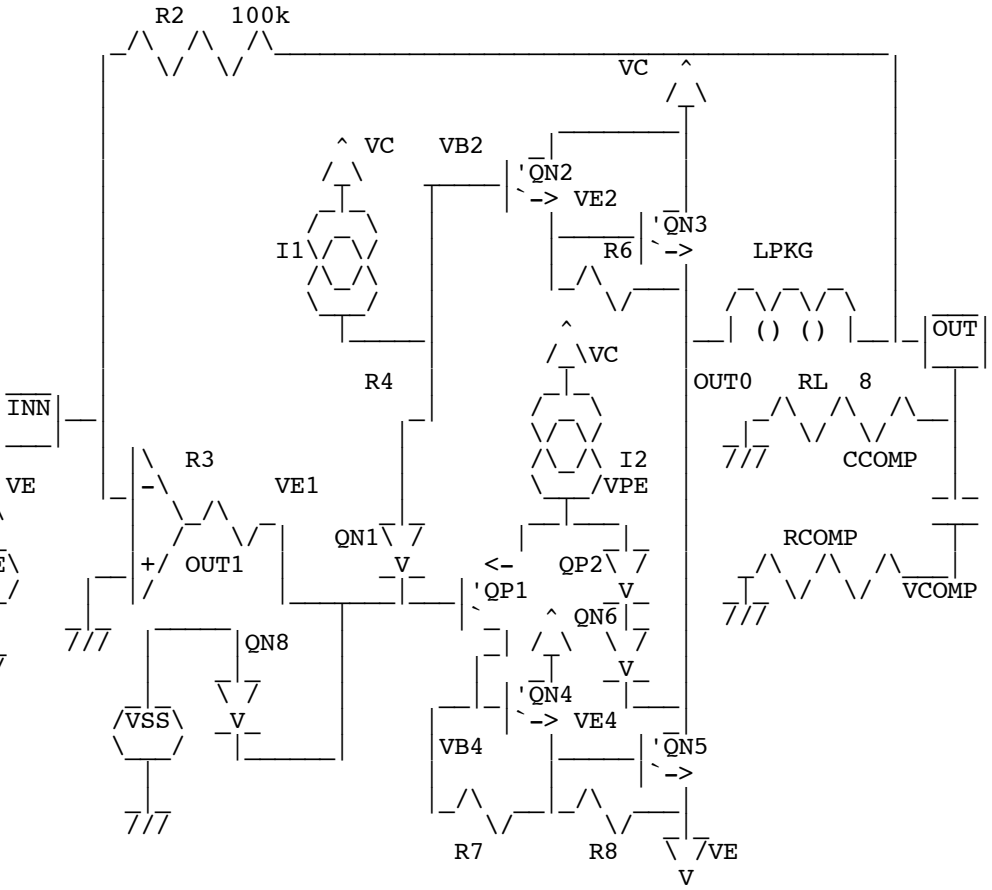


```
.OPTIONS  GMIN=1e-15 METHOD=gear ABSTOL=1e-15 temp=27

VSS     VS      0     DC      -3.65
QN8     VS      VS    VE1     NPNP  1000
VCC     VC      0     DC      8
VEE     VE      0     DC      -5.5
VIN     IN      0     DC      0    SIN( 0 45m 10k 1n )
R1      IN      INN   1k
R2      INN     OUT   100k
X_OPA   INN     0     OUT1    OP_AMP
R3      OUT1    VE1   1000
QN1     VB2     VB2   VE1     NPNP 90
I1      VC      VB2   200u
QN2     VC      VB2   VE2     NPNP 5
QN3     VC      VE2   OUT0    NPNP 100
R6      VE2     OUT   20k
I2      VC      VPE   1m
QP1     VB4     VE1   VPE     PNPP 1
QP2     VPB2    VPB2  VPE     PNPP 10
QN6     VPB2    VPB2  OUT0    NPNP 10
QN4     VC      VB4   VE4     NPNP 10
QN5     OUT0    VE4   VE      NPNP 100
R7      VB4     VE4   100k
R8      VE4     VE    20k
LPKG    OUT0    OUT   10n
RL      OUT     0     4
CCOMP   OUT     VCOMP .1u
RCOMP   VCOMP   0     1
.tran    10n   .2m    0      10n

.control
```

```
run
set     pensize = 1
plot    out ve1 vb4 ve

.endc


.SUBCKT  OP_AMP INN   INP  OUT
EGBUF    VDIFF  0     INN  INP  1
RGM1     VDIFF  VDIFF2 1k
RGM2     VDIFF2 VGND2  1k
CBW      OUT    VGND2  4p
CSP      VDIFF2 0      4f
EGOUT    OUT    0     VGND2 0    -100000000
.ENDS    OP_AMP

*
*                        CBW _|_    |          .SUBCKT OP_AMP INN INP OUT
*                 VDIFF       ___   |_____|OUT|
*                    ___/\   ___|_ _|_ /   \                  |\
*      |INN|__    _|_ /   \ RGM VGND |EGOUT|                 |INN|__| \
*      |___|   _|_ /   \                                      |___|   \
*            +|EGBUF|                                                 OPA\_|OUT|
*                 |       __|_ \___/                                  /|___|
*      |INP|__|  \___/        |_|   GAIN=-1M                 |INP|__|  /
*      |___|       |  GAIN=1  ///   |_|                      |___|   /
*                 _|_                ///                              |/
*                 ///                     ODB = 20MHz
*
.model    NPNP   NPN( BF=210 IS=1e-17   IKF=7.6e-03
+ RB=732        RBM=441.2                          IRB=7.5E-04
+ RE=15.33      RC=109.1
)

.model    PNPP   PNP(   BF=10    IS=1e-17   )

.end
```

======Bottom_Side_SAT==========

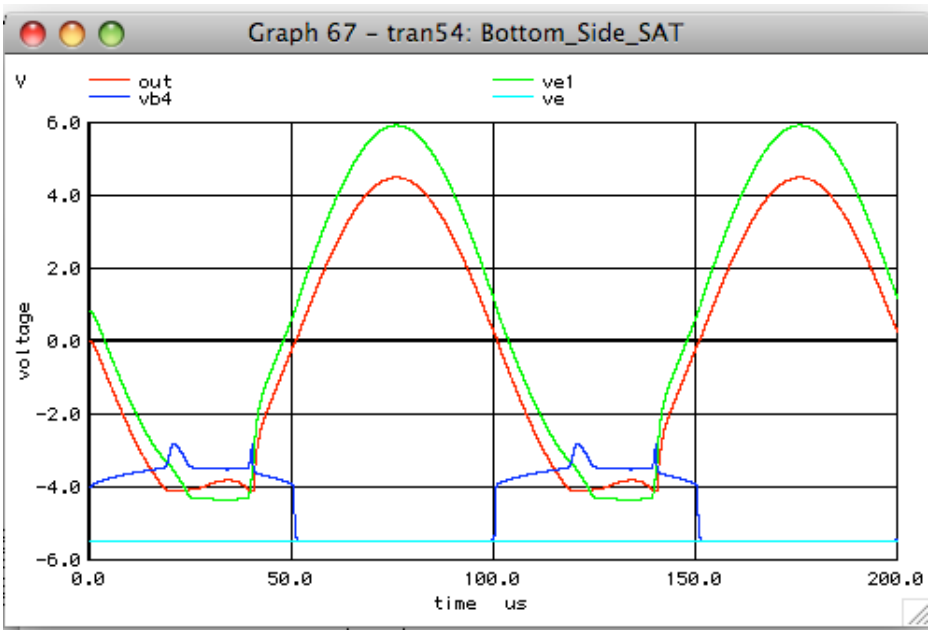

In the case where a PNP composite is being used to drive an output NPN to ground, a strange kind of wave form can happen when the output pin starts to clip against the bottom rail. As is input signal is increased, the output NPN can become less capable of pulling current to ground. This happens when the lateral PNP is allowed to saturate, which is not good design pratice. Enough collector emitter head room needs to be designed in including high temerature considerations.

***#1==========WinSpiceVersion==========**

```
Bottom_Side_SAT
* dsauersanjose@aol.com  8/15/08
* www.idea2ic.com
*                              R2   100k
*                            _/\  /\  /\_____________________________________
*                           |   \/  \/                          VC  ^        |
*                           |                                      /_\       |
*                           |                                       _T       |
*                           |                 ^ VC   VB2   _|_______|        |
*                           |                /_\      ____|'QN2    |        |
*                           |                 _T_       |`-> VE2   _|        |
*                           |                /_ _\      |_____|'QN3          |
*                           |             I1\/ _ \/     |   R6|`->    LPKG   |
*                           |               /\_/\       |_/\   \/___        |
*                           |               \___/        |     _ _ _ _ \/ \  |
*                           |                 |_____|    ^   /_\/ \/ \ |__|_|OUT|
*          R1 1K            |                          /_\VC              |___|
*   ___                     |                 R4       _T_       OUT0   RL  8 |
*   |IN|_/\  /\  /\_|INN|__|                         /_ _\        _/\  /\  /\__
*   |___|   \/  \/  |___|  |                         \/_\/        _|_  \/  \/   |
*    _|_                |\  R3                      /\_/\ I2    7//     CCOMP  |
*   /VIN\     ^ VC   ^ VE |_ -\        VE1          \___/VPE                _|_
*   \___/    /_\     /_\   \_/\_ _                   _T_                     ___
*    |      _T_      _T_     /   \/ |   QN1\ /      |___|___|_        RCOMP  |
*    _|_   /VCC\   /VEE\  __ |+/ OUT1 |       _V_    <-   QP2\ /      _/\  /\  /\___|
*    7//   \___/   \___/  |  |/        |_______|___|'QP1     _V_      _|_ \/  \/  VCOMP
*                         |  |                  |`_     ^ QN6|_      7//
*                        _|_ |_____|QN8          _| /_\   \ /
*                        7//                      |  _T    _V_
*                                                 |_|_|'QN4   |___
*                        _|_                      |  |`-> VE4  _T_
*                       /VSS\   _V_               |VB4      |_____|'QN5
*                       \___/   |_______|         |          |`->
*                        _T_                      |_/\  __|_/\  ___|
*                        7//                         \/     \/   _T_
*                                                  R7      R8   \ /VE
*                                                                V
*

.OPTIONS  GMIN=1e-15 METHOD=gear ABSTOL=1e-15 temp=27

VSS     VS      0     DC      -3.65
QN8     VS      VS    VE1     NPNP  1000
VCC     VC      0     DC      8
VEE     VE      0     DC      -5.5
VIN     IN      0     DC      0    SIN( 0 45m 10k 1n )
R1      IN      INN   1k
R2      INN     OUT   100k
X_OPA   INN     0     OUT1    OP_AMP
```

```
R3      OUT1    VE1   1000
QN1     VB2     VB2   VE1     NPNP 90
I1      VC      VB2   200u
QN2     VC      VB2   VE2     NPNP 5
QN3     VC      VE2   OUT0    NPNP 100
R6      VE2     OUT   20k
I2      VC      VPE   1m
QP1     VB4     VE1   VPE     PNPP 1
QP2     VPB2    VPB2  VPE     PNPP 10
QN6     VPB2    VPB2  OUT0    NPNP 10
QN4     VC      VB4   VE4     NPNP 10
QN5     OUT0    VE4   VE      NPNP 100
R7      VB4     VE4   100k
R8      VE4     VE    20k
LPKG    OUT0    OUT   10n
RL      OUT     0     4
CCOMP   OUT     VCOMP .1u
RCOMP   VCOMP   0     1
.tran    10n   .2m    0      10n

.control
run
set     pensize = 1
plot    out ve1 vb4 ve

.endc


.SUBCKT  OP_AMP INN   INP  OUT
EGBUF    VDIFF  0     INN  INP  1
RGM1     VDIFF  VDIFF2 1k
RGM2     VDIFF2 VGND2  1k
CBW      OUT    VGND2  4p
CSP      VDIFF2 0      4f
EGOUT    OUT    0     VGND2 0    -100000000
.ENDS    OP_AMP

*
*                       CBW _|_____|          ____      .SUBCKT OP_AMP INN INP OUT
*                 VDIFF      ____   |_____|OUT|
*                     ___/\   ____|  _|_      |____|
*      |INN|__      _|_    \/   |_ /   \          ____  |\
*      |___|  |_ /   \ RGM VGND |EGOUT|          |INN|__| \
*             +|EGBUF|        __|      |                  \
*            __|       |        |_ \___/                  OPA\_|OUT|
*      |INP|__|  \___/        _|_    |  GAIN=-1M         ____  /  |____|
*      |___|       |  GAIN=1  ///   _|_                  |INP|__|  /
*                 _|_                ///                  |___|  /
*                 ///                     ODB = 20MHz              |/
*
.model    NPNP   NPN( BF=210 IS=1e-17   IKF=7.6e-03
+ RB=732        RBM=441.2                              IRB=7.5E-04
+ RE=15.33      RC=109.1                               )

.model    PNPP   PNP(   BF=10   IS=1e-17   )

.end
```